3SM222FMT1KA MEMS Microphone IC

Product Description

The ***3SM222FMT1KA*** microphone IC are integrated with specialized pre-amplification & analog-to-digital converter ASIC to provide high SNR output from a capacitive audio sensor. It's packaged for surface mounting and high temperature reflow assembly. ***3SM222FMT1KA*** is ideal in many compact portable consumer electronic devices such as TV, IoT device.

Features

- Top port
- High stability - no risk of membrane aging
- Suitable for automatic pick-and-place handler and SMT process
- Pulse density modulator (PDM) output interface supports two microphones on a single data line
- Miniature dimension 4.00mm x 3.00mm x 1.06mm
- RoHS/Green compliant
- Sensitivity deviation within ±1dB
- Package type : LGA 8-pin
- Omnidirectional

Applications

- TVs
- IoT Devices

Table of Contents

Product Description ……. P.1
Features …….. P.1
Applications …….. P.1
Table of Contents…….…….……. P.2
Functional Block Diagram……... P.3
Pin Definition and Function ……..... P.3
Temperature Range..... P.3
Acoustical and Electrical Characteristics..... P.4
Timing Characteristics..... P.6
Frequency Response…...……. P.7
State Diagram…...…… P.8
Reliability Qualifications ……..... P.9
Reflow Profile ……..……..... P.10
PCB Land Pattern Layout …...…… P.11
Application Circuit …….. P.12
Handling Instructions ……..... P.13
Dimensions …….. P.14
Package Information..…….. P.15
Revision History…….....……... P.17

Functional Block Diagram

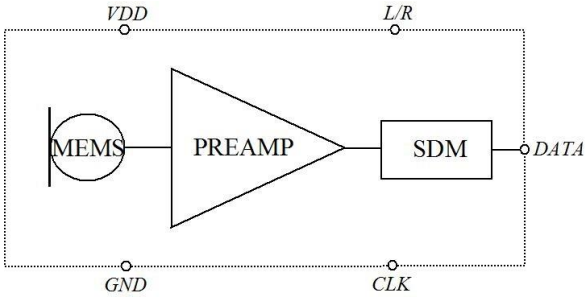

Pin Definition and Function

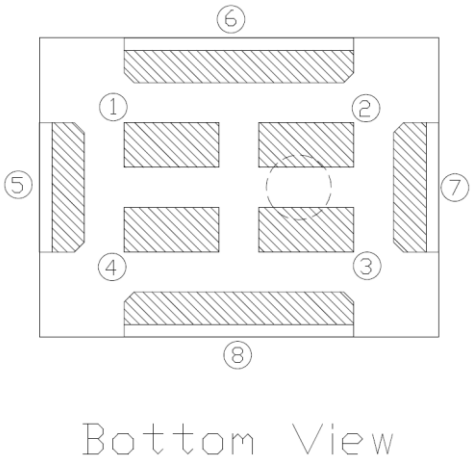

Table 1.

Pin #	Symbol	Type	Function
1	VDD	Power	Power Supply
2	L/R	Non-Digital I	Left(Low) / Right(High) Select Pin
3	CLK	Digital I	Clock Input to Microphone
4	DATA	Digital O	Digital Output Signal
5	GND	Power	Ground
6	GND	Power	Ground
7	GND	Power	Ground
8	GND	Power	Ground

Temperature Range

Table 2.

Storage Temperature	T_{STG}	-40℃ ~ 125℃
Operating Temperature Range	T_A	-40℃ ~ 105℃

Acoustical and Electrical Characteristics

Table 3. General Microphone Specifications
Typical test conditions are TA = 23 °C, VDD = 1.8V and R.H. = 50 % measured in a pressure chamber test setup. All voltages refer to GND node

Parameters	Symbol	Min.	Typ.	Max.	Unit	Test Conditions
Low Frequency Roll-off	LFRO		38		Hz	-3dB relative to 1KHz
Supply Voltage	Vdd	1.6		3.6	V	
Output Load	C_{Load}			100	pF	
Wake-up Time(1)			100		ms	Fclk≧1MHz
Startup Time			100		ms	
Sleep Time			1		ms	Fclk≦1KHz
Data Format	1/2 Cycle PDM					
Directivity	Omnidirectional					
Polarity	Decreasing density of 1's					Increasing sound pressure

Table 4. Performance Mode Microphone Specifications
Typical test conditions are TA = 23 °C, VDD = 1.8V, Clock=2.4MHz and R.H. = 50 % measured in a pressure chamber test setup. All voltages refer to GND node

Parameters	Symbol	Min.	Typ.	Max.	Unit	Test Conditions
Acoustic						
Sensitivity	S	-27	-26	-25	dBFS	1KHz, 94dBSPL
Signal to Noise Ratio	S/N		60		dBA	A-weighted
Equivalent Noise Level	ENL		34		dBA	A-weighted
Total Harmonic Distortion	THD		<0.2		%	94dBSPL
			1		%	110dBSPL
Acoustic Overload Point	AOP		120		dBSPL	10% THD@1KHz, S = Typ.
Electrical						
Clock Frequency	Fclk	1.0		3.25	MHz	
Current Consumption	Isb		550		μA	Vdd=1.8V
			850		μA	Vdd=3.6V
Power Supply Rejection Ratio	PSRR		60		dBV/FS	1KHz, 200mV peak to peak sinewave on Vcc 2.1V
Power Supply Rejection	PSR+N		-80		dBFS (A)	217Hz, 100mV 1/8 duty cycle peak to peak square wave on Vcc 2.1V, A-weighted

Table 5. Low-Power Mode Microphone Specifications
Typical test conditions are TA = 23 °C, VDD = 1.8V, Clock=768KHz and R.H. = 50 % measured in a pressure chamber test setup. All voltages refer to GND node

Parameters	Symbol	Min.	Typ.	Max.	Unit	Test Conditions
Acoustic						
Sensitivity	S	-27	-26	-25	dBFS	1KHz, 94dBSPL
Signal to Noise Ratio	S/N		60		dBA	A-weighted
Equivalent Noise Level	ENL		34		dBA	A-weighted
Total Harmonic Distortion	THD		<0.2		%	94dBSPL
			1		%	110dBSPL
Acoustic Overload Point	AOP		120		dBSPL	10% THD@1KHz, S = Typ.
Electrical						
Clock Frequency	Fclk	350		800	KHz	
Current Consumption	Isb		300		µA	Vdd=1.8V
			400		µA	Vdd=3.6V
Power Supply Rejection Ratio	PSRR		60		dBV/FS	1KHz, 200mV peak to peak sinewave on Vcc 2.1V
Power Supply Rejection	PSR+N		-80		dBFS (A)	217Hz, 100mV 1/8 duty cycle peak to peak square wave on Vcc 2.1V, A-weighted

Table 6. Sleep Mode Microphone Specifications
Typical test conditions are TA = 23 °C, VDD = 1.8V, Clock=0Hz and R.H. = 50 % measured in a pressure chamber test setup. All voltages refer to GND node

Parameters	Symbol	Min.	Typ.	Max.	Unit	Test Conditions
Clock Frequency	Fclk	0		250	KHz	
Current Consumption Sleep Mode	Isleep		10		µA	Clock = VDD or GND

(1). Time from the first clock edge to valid output data

Timing Characteristics

Table 7. Microphone Interface Specifications

Parameters	Symbol	Min.	Typ.	Max.	Unit	Test Conditions
Logic Input High	V_{IH}	0.70x VDD		3.6	V	
Logic Input Low	V_{IL}	-0.3		0.30x VDD	V	
Logic Output High	V_{OH}	VDD -0.45		VDD	V	Iout = 1mA
Logic Output Low	V_{OL}	0		0.45	V	Iout = 1mA
Clock Frequency	F_{clock}			250	KHz	Sleep Mode
		350		800		Low-Power Mode
		1.0		3.25	MHz	Performance Mode
Clock Duty Cycle		40		60	%	
Clock Period for Normal Mode	Tcyc	208		1000	ns	
Data Setup Time	T_{dv}			100(1)	ns	
Data Hold Time	T_{hold}	3(1)			ns	

(1). Guaranteed by design

Timing Waveforms

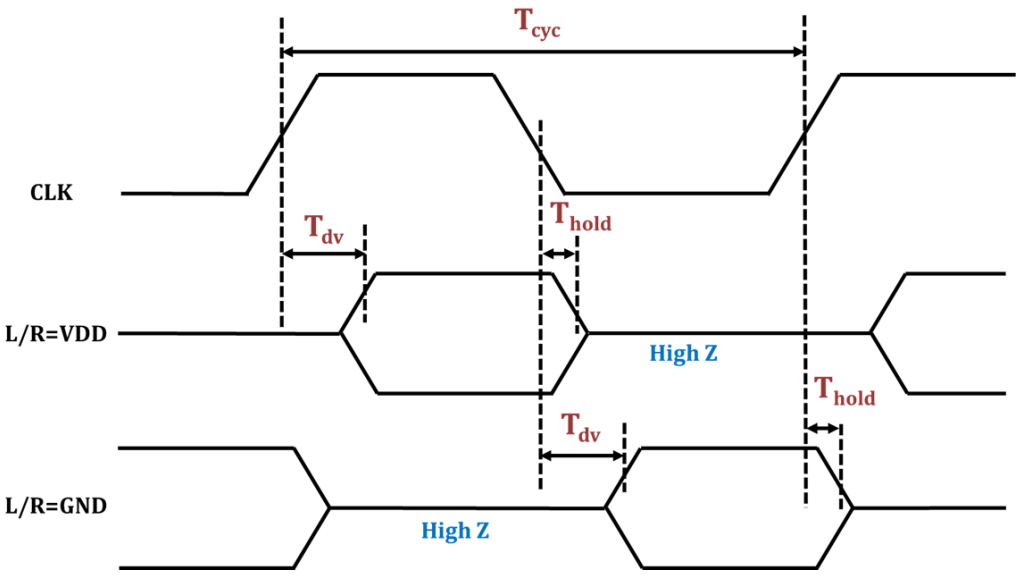

Frequency Response

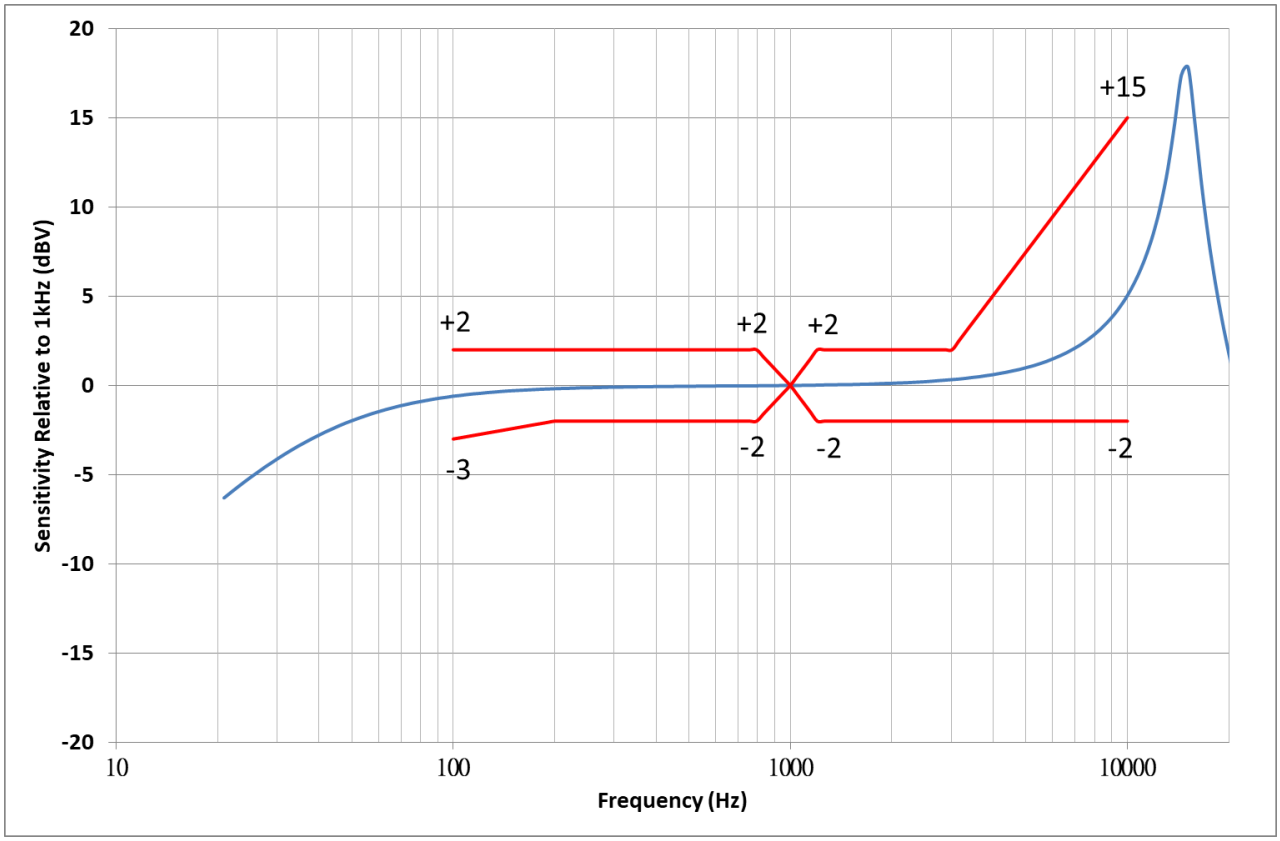

** Measured frequency of 1 KHz*

Upper Limit						
Hz	100	800	1000	1200	3000	10000
dB ref. 1KHz	+2	+2	0	+2	+2	+15
Lower Limit						
Hz	100	200	800	1000	1200	10000
dB ref. 1KHz	-3	-2	-2	0	-2	-2

State Diagram

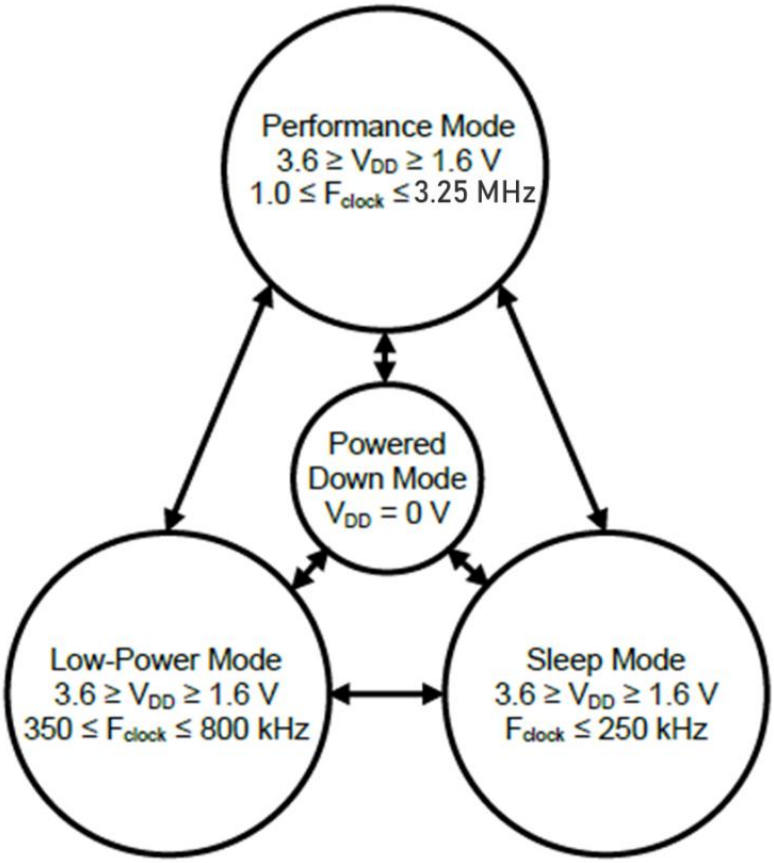

Reliability Qualifications

Table 8.

Test Item	Description
High Temperature Storage	Storage at 125℃ for 1,000 hours JESD22-A103
Low Temperature Storage	Storage at -40℃ for 1,000 hours JESD22-A119
High Temperature Operation Bias	Under Bias at 105℃ for 1,000 hours JESD22-A108
Low Temperature Operation Bias	Under Bias at -40℃ for 1,000 hours JESD22-A108
Temperature Humidity Bias	Under Bias at 85℃/85%RH for 1,000 hours JESD22-A101
Thermal Cycling Test	Thermal Cycle from -40℃~125℃, 100 cycles JESD22-A104
Reflow	5 reflow cycles with peak 260℃ J-STD-020
Vibration	4 cycles lasting 12 minutes from 20 to 2KHz in X, Y and Z with peak acceleration of 20G JESD22-B103
Mechanical Shock	Total 18 pulses 10,000G in X,Y and Z JESD22-B104
ESD	HBM:3KV, MM:300V, CDM:500V Air Discharge:15KV, Contact Discharg:8KV JESD22-A114(HBM) JESD22-A115(MM) JESD22-C101(CDM) IEC 61000-4-2(Air Discharge) IEC 61000-4-2(Contact Discharge)

Notes: Microphones meet all acoustic and electrical specifications before and after reliability testing, except sensitivity which can deviate up to 3dB from its initial value.

After 5 reflow cycles, the sensitivity of the microphone shall not deviate more than 1 dB from its initial value.

Reflow Profile

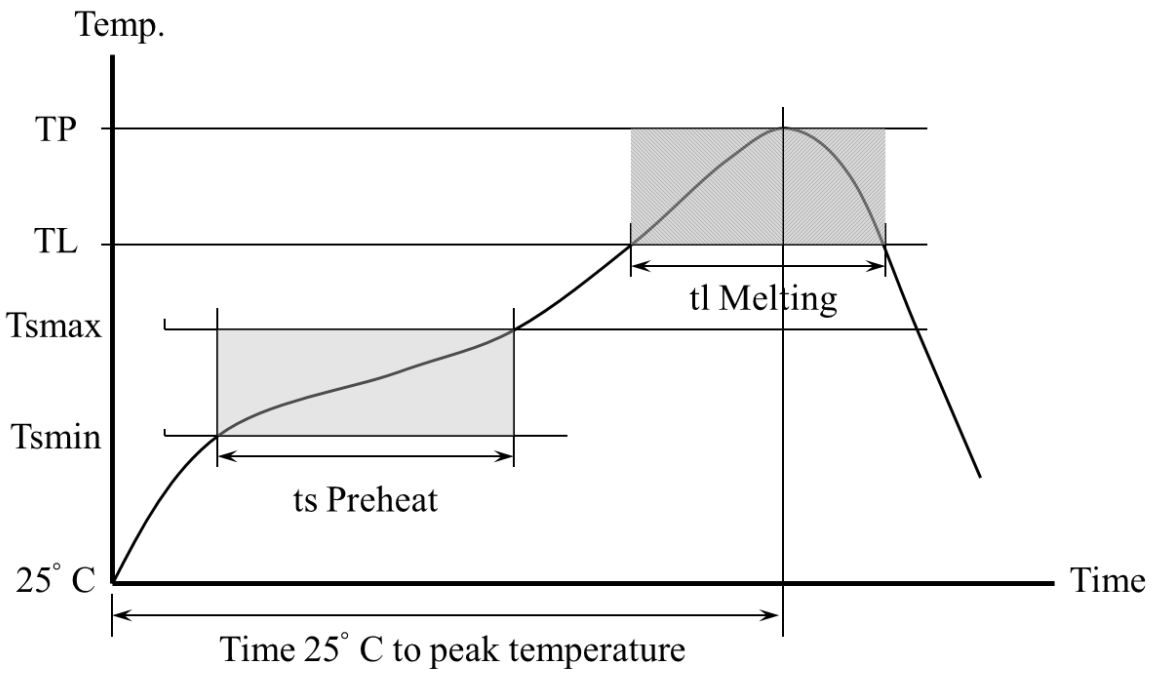

Table 9. Recommended Reflow Profile Limits

Profile Feature	Pb-free
Preheat	
Minimum temperature (Tsmin)	150 ℃
Maximum temperature (Tsmax)	200 ℃
Time (ts)	60~180 sec
Average Ramp up rate (Tsmax to Tp)	3 ℃/sec
Melting area	
Melting temperature (TL)	217 ℃
Time maintained above melting (tl)	60~150 sec
Peak Temperature (TP)	260 ℃
Time within 5℃ of actual peak temperature	20~40 sec
Ramp down rate	6 ℃/sec maximum
Time 25℃ to peak temperature	8 minute maximum

Notes: Based on IPC/JDEC J-STD-020 Revision F.

All temperatures refer to topside of the package, measured on the package body surface

.

PCB Land Pattern Layout

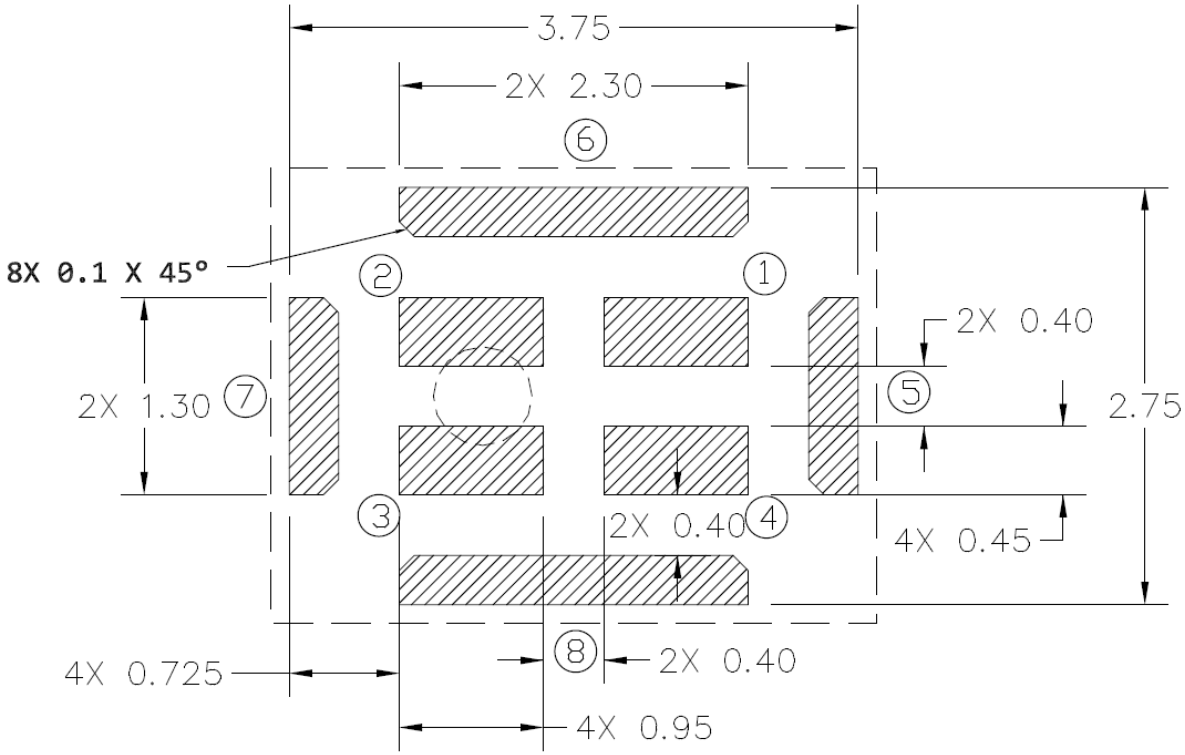

Application Circuit

The L/R pad lets the user to select the DATA signal pattern as explained in Table 7.
The L/R pin must be connected to either VDD or GND.

Table 10. L/R channel selection

L/R	CLK low	CLK high
GND	DATA valid	High impedance
VDD	High impedance	DATA valid

Single microphone application:

0.1μF ceramic, and 10μF ceramic power supply decoupling capacitors should be placed as near as possible to VDD of the device. **The L/R pin must be connected to VDD or GND**.

Two microphones application:

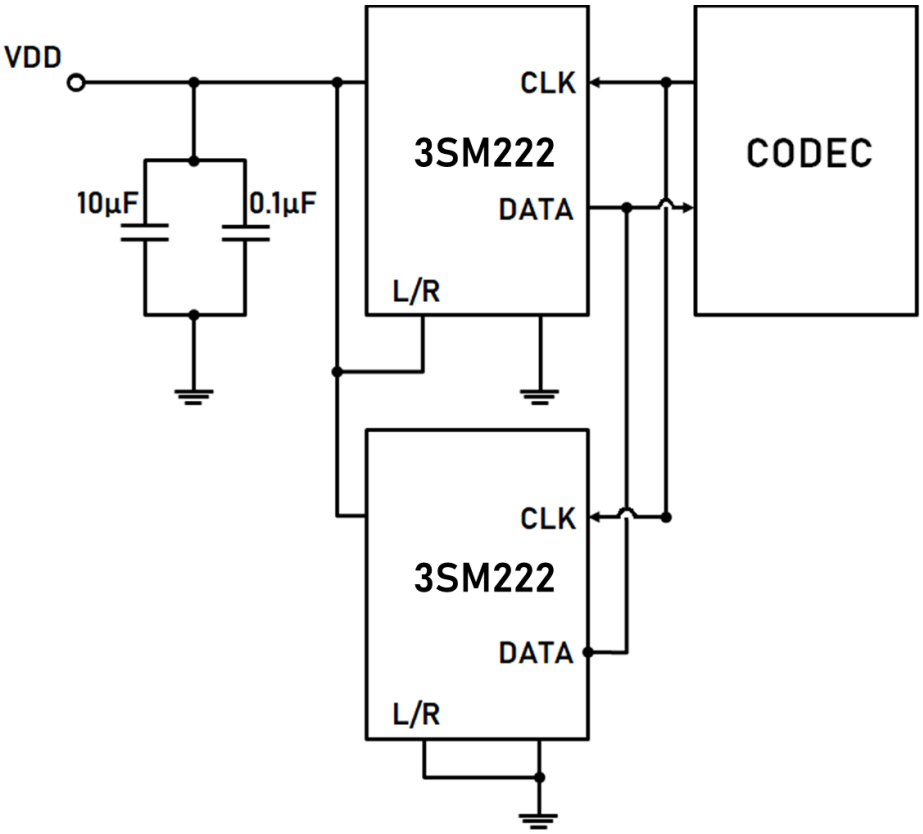

Handling Instructions

The MEMS microphone IC can be handled using standard pick-and-place and chip shooting equipment. Care should be taken to avoid damage to the MEMS microphone IC structure as follows:

- Do not apply vacuum nozzle over the acoustic port (AP) of the microphone to avoid damage to the device.
- Do not blow air directly into acoustic port.
- Brushing the board with/without solvents may damage the device.
- Do not use excessive force to place the microphone on the PCB.
- In case of manual handling, it should be handled with plastic tweezers to avoid damage the device.

Dimensions

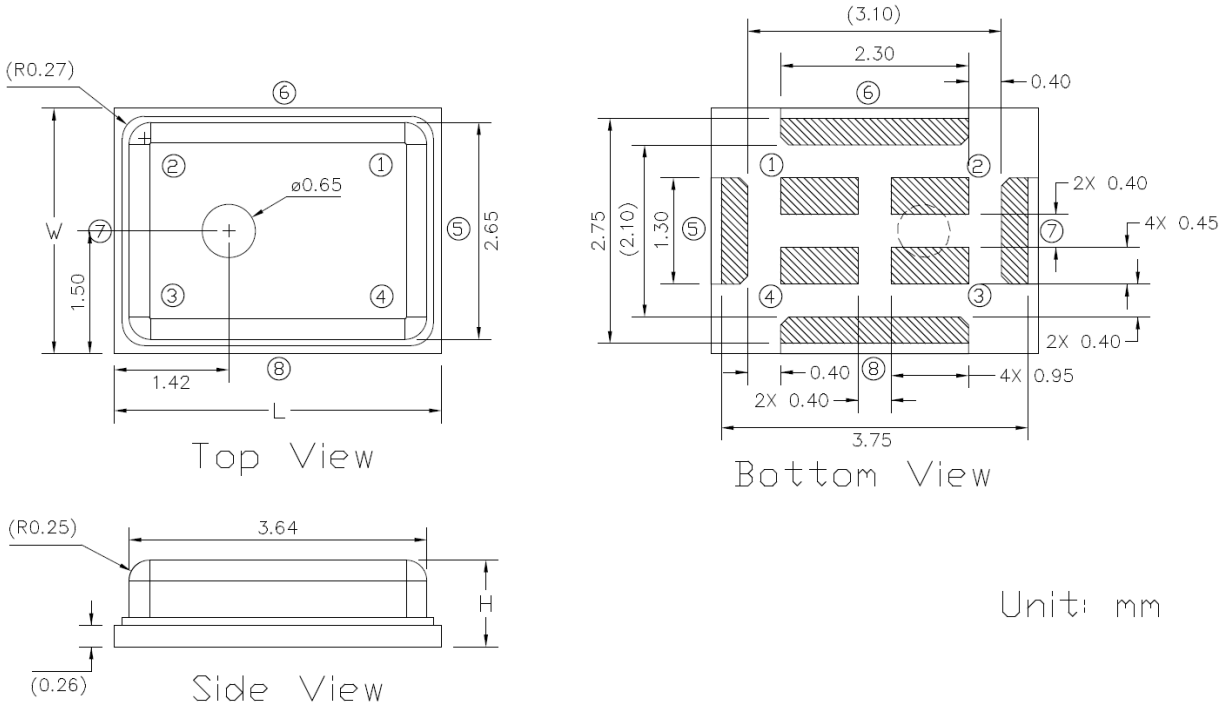

Table 11. (Top View)

Item	Dimension	Tolerance
Length (L)	4.00 mm	±0.10 mm
Width (W)	3.00 mm	±0.10 mm
Height (H)	1.06 mm	±0.10 mm
Acoustic Port	Φ 0.65 mm	±0.05 mm

Package Information

Carrier Tape:

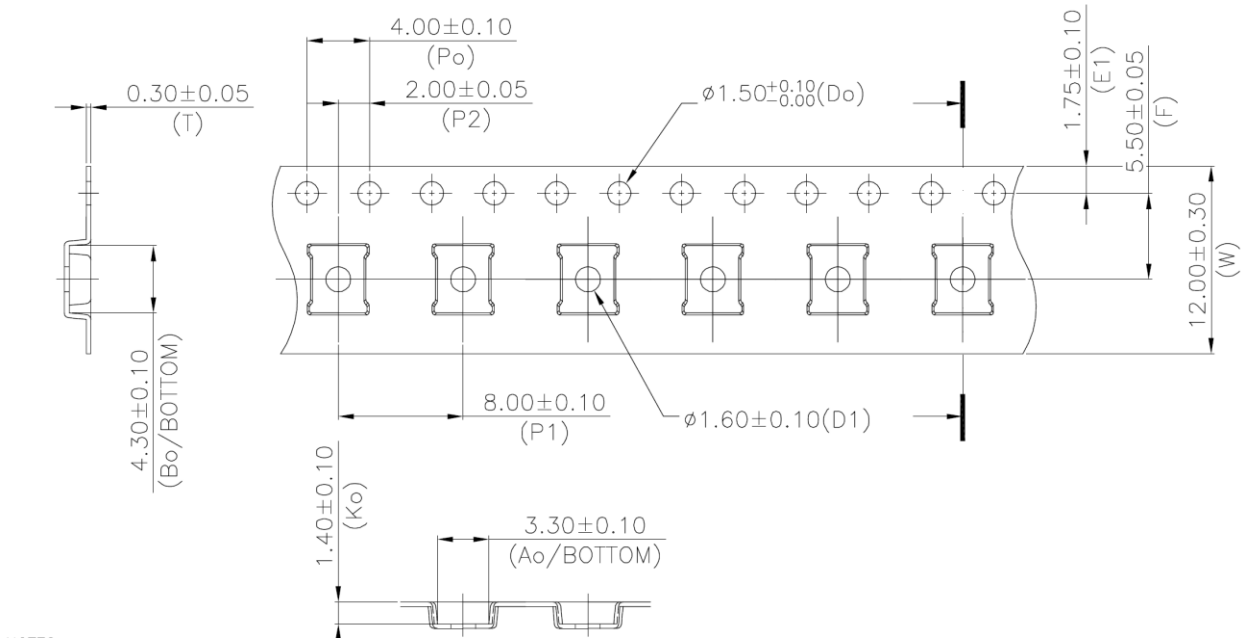

1. 10 sprocket hole pitch cumulative tolerance ±0.20.
2. Carrier camber is within 1 mm in 250 mm.
3. Material : Black Conductive Polystyrene Alloy.
4. All dimensions meet EIA-481 requirements.
5. Thickness : 0.30±0.05 mm.
6. MSL(Moisture sensitivity level) Class1.

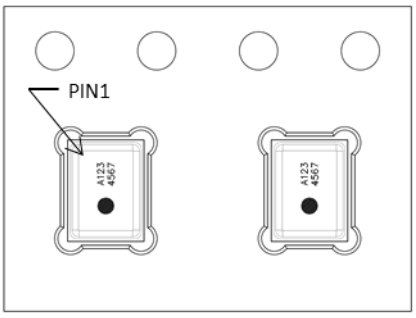

Laser Marking:

XXXX

AAAA

Laser marking on the top side

XXXX	**Internal Tracking Code**
AAAA	**Lot Tracking Code**

13” Tape Reel :

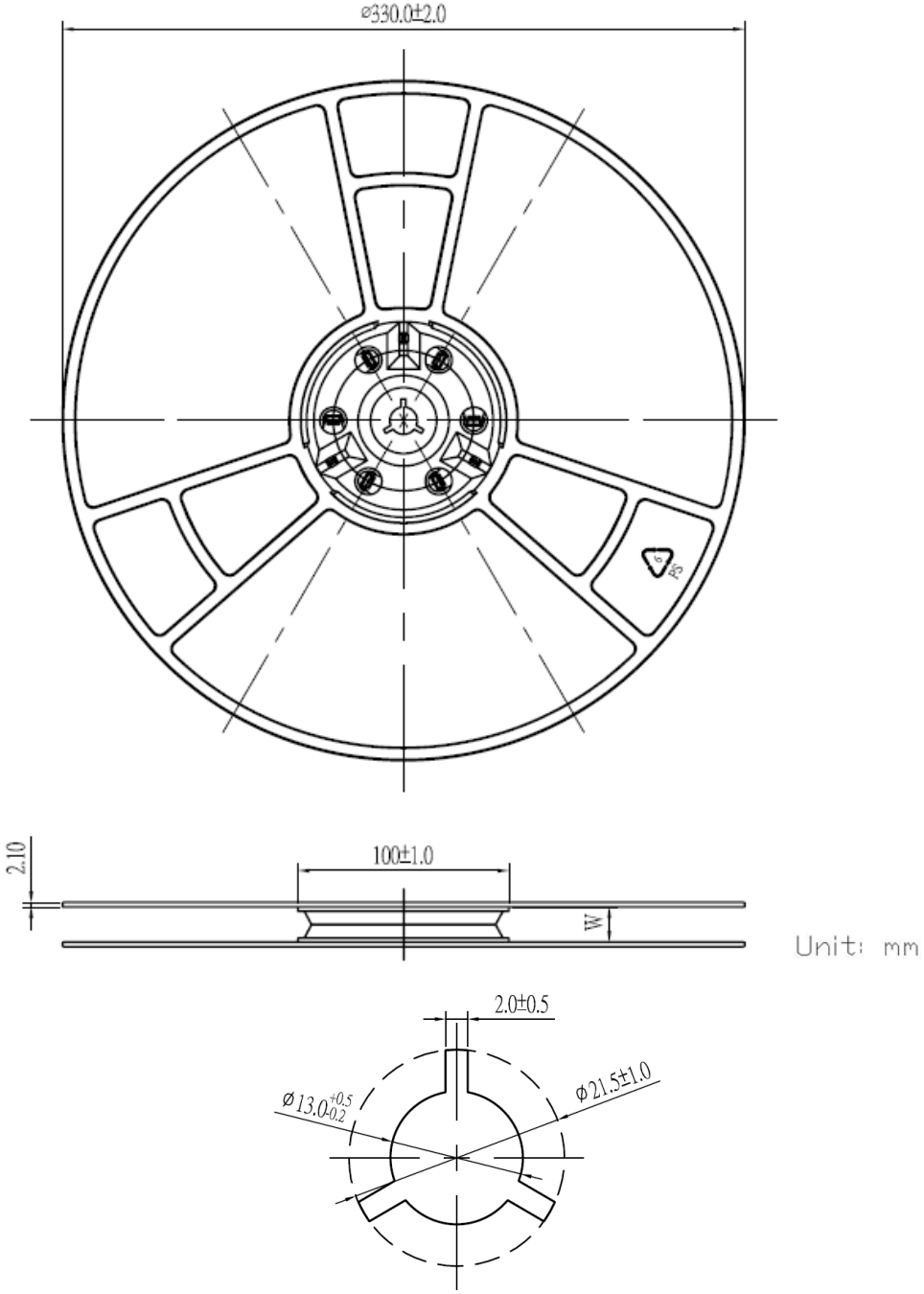

Model Number	Reel Diameter	Quantity Per Reel
3SM222FMT1KA	13”	5,000

Revision History

Revision	Date	Description
1.0	2019/08/06	Formal release
1.1	2019/09/09	Modify “Acoustical and Electrical Characteristics”
1.2	2020/01/15	Modify “Applications” Modify “Frequency Response”
1.3	2020/07/17	Modify “Features” Modify “Acoustical and Electrical Characteristics” Modify “Frequency Response” Modify “Reliability Qualifications” Modify “Reflow Profile”
1.4	2020/09/04	Modify “Acoustical and Electrical Characteristics”
1.5	2020/12/29	Modify “Timing Characteristics” Add “Laser Marking”
1.6	2021/07/22	Modify “Acoustical and Electrical Characteristics” Modify “Frequency Response” Modify “Reliability Qualifications” Modify “Package Information”
1.7	2021/09/02	Modify “Frequency Response”
1.8	2022/04/12	Modify “Timing Characteristics”
1.9	2023/04/20	Modify “Timing Characteristics” Modify “Reliability Qualifications” Modify “Package Information”