3SM127LZB1HA AEC-Q103 Qualified MEMS Microphone IC

Product Description

The ***3SM127LZB1HA*** microphone IC are integrated with specialized pre-amplification ASIC to provide high sensitivity, high SNR output from a capacitive audio sensor. It's packaged for surface mounting and high temperature reflow assembly. ***3SM127LZB1HA*** which is able to endure reflow temperature up to 260℃ for 30 seconds can be used in SMT process. It is widely used in automotive and industrial electronics device.

Features

- AEC-Q100/103 qualified
- Bottom port
- High stability - no risk of membrane aging
- Suitable for automatic pick-and-place handler and SMT process
- Miniature dimension 3.50mm x 2.65mm x 0.98mm
- Low current consumption 80uA
- RoHS/Green compliant
- Sensitivity deviation within ±1dB
- Package type : LGA 5-pin
- Omnidirectional

Applications

- Automotive
- Industrial

Table of Contents

Product Description ……. P.1
Features …….. P.1
Applications …… P.1
Table of Contents……..……. P.2
Functional Block Diagram …….……. P.3
Pin Definition and Function ……..... P.3
Temperature Range …..……... P.3
Acoustical and Electrical Characteristics..... P.4
Frequency Response …. …….…… P.5
Reliability Qualifications ……..... P.6
Reflow Profile ……..... P.7
PCB Land Pattern Layout ……... P.8
Application Circuit …….. P.9
Handling Instructions ……..... P.10
Dimensions …… P.11
Package Information ……... P.12
Revision History ……. P.14

Functional Block Diagram

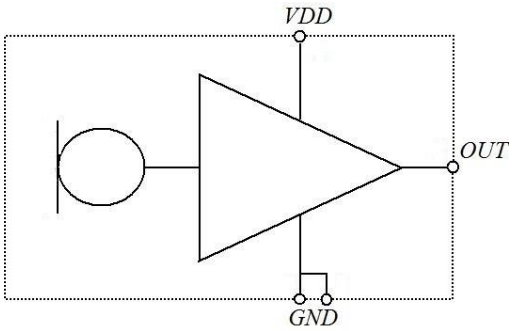

Pin Definition and Function

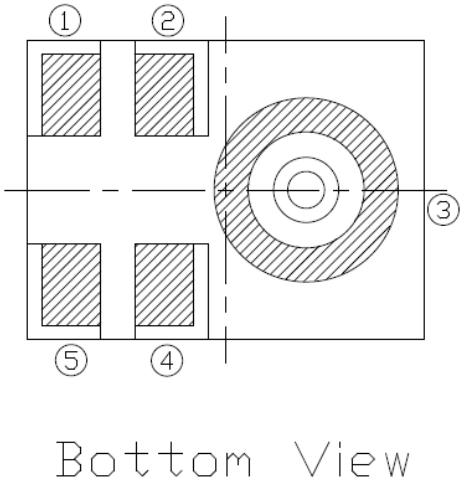

Table 1

Pin #	Symbol	Function
1	OUTPUT	Analog signal output
2	GND	Ground
3	GND	Ground
4	GND	Ground
5	VDD	Power supply

Temperature Range

Table 2

Storage Temperature	T_{STG}	-40℃ ~ 150℃
Operating Temperature Range	T_A	-40℃ ~ 125℃

Acoustical and Electrical Characteristics

Table 3 Typical test conditions are TA = 23 °C, VDD = 2.1 V and R.H. = 50 % measured in a pressure chamber test setup. All voltages refer to GND node

Parameters	Symbol	Min.	Typ.	Max.	Unit	Test Conditions
Acoustic						
Sensitivity	S	-39	-38	-37	dBV/Pa	1KHz, 94dBSPL
Signal to Noise Ratio	S/N		65		dBA	A-weighted
Equivalent Noise Level	ENL		29		dBA	A-weighted
Total Harmonic Distortion	THD		0.1		%	94dBSPL
			1		%	120dBSPL
Acoustic Overload Point	AOP		130		dBSPL	10% THD@1KHz, S = Typ.
Low Frequency Roll-off	LFRO		<20		Hz	-3dB relative to 1KHz
Electrical						
Supply Voltage	Vdd	1.6		3.6	V	
Current Consumption	Isb		80		µA	Vdd=2.1V
			80		µA	Vdd=3.6V
Power Supply Rejection	PSR+N		-93		dBV(A)	217Hz, 100 mV peak to peak square wave on Vcc 2.1V
Power Supply Rejection Ratio	PSRR		63		dB	1KHz, 200 mV peak to peak sine wave on Vcc 2.1V
Output Impedance	Zout			200	Ω	@1KHz
Output DC Offset		1.3			V	
Directivity	Omnidirectional					
Polarity	Decreasing output voltage					Increasing sound pressure

Frequency Response

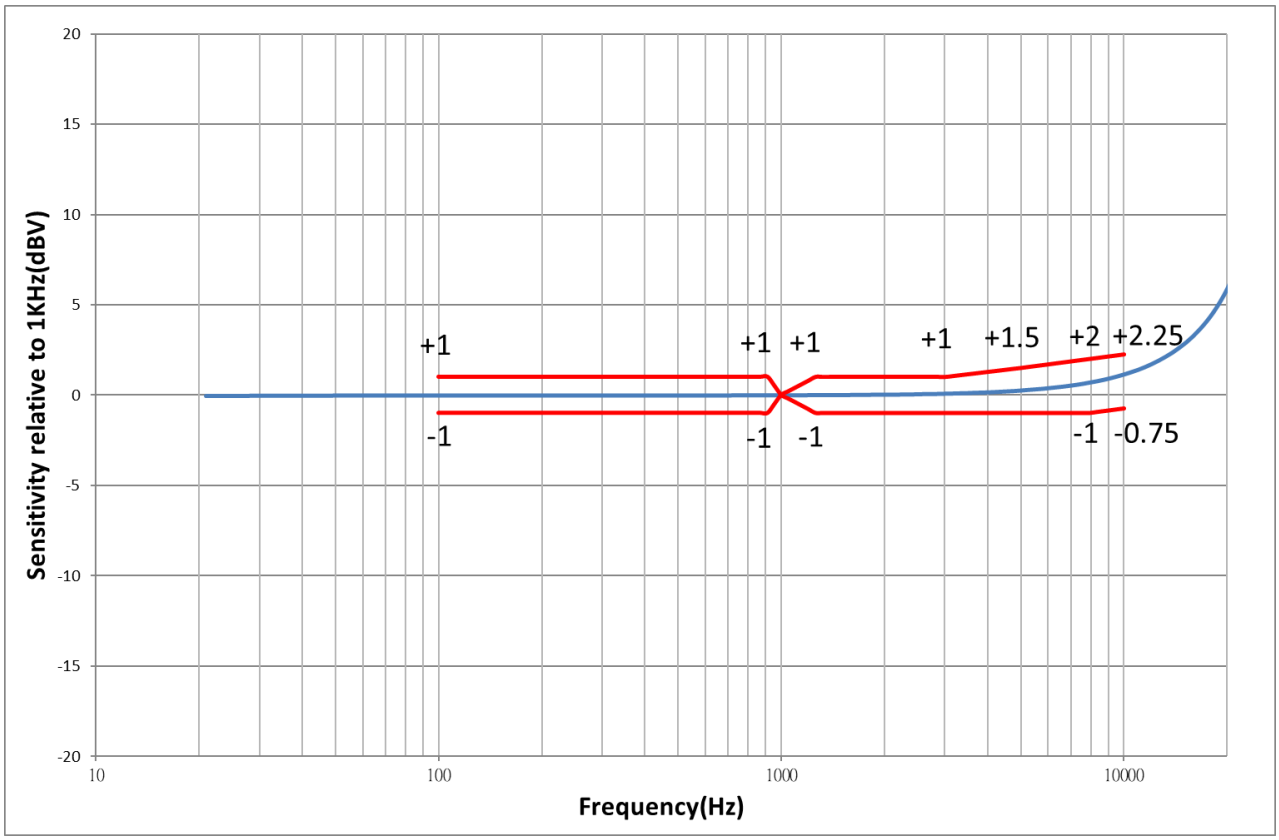

Typical frequency response normalized to 1KHz (Measured)

Upper Limit								
Hz	100	900	1000	1250	3000	5000	8000	10000
dB ref. 1KHz	+1	+1	0	+1	+1	1.5	2	2.25
Lower Limit								
Hz	100	900	1000	1250	3000	5000	8000	10000
dB ref. 1KHz	-1	-1	0	-1	-1	-1	-1	-0.75

Reliability Qualifications

Table 4

Test Item	Description	Standard	Result
High Temperature Operating Life	T_A=125℃, V_{CC}=3.6V, 1000hours	AEC Q100 Rev.H	PASS
Low Temperature Operation Life	T_A=-40℃, V_{CC}=3.6V, 1000hours	JESD22-A108	PASS
High Temperature Storage Life	T_A=150℃, 1000hours	AEC Q100 Rev.H	PASS
Low Temperature Storage Life	T_A=-40℃, 1000hours	JESD22-A119	PASS
Pre-Condition	Temperature cycling 5 cycles, Bake 24hrs, Moisture sock 168hrs, Reflow 3 cycles	JESD22-A113	PASS
Temperature Humidity Bias	T_A=125℃, R.H.=85%, V_{CC}=3.6V, 1000hours	AEC Q100 Rev.H	PASS
Thermal Cycling	TA=-55℃ to 150 ℃, 1000cycles	AEC Q100 Rev.H	PASS
Humidity & Temperature Cycle	+65℃/90%RH +45℃/95%RH -10℃ , 5cycles	AEC Q103-003	PASS
Reflow	Peak temperature = 260℃, 5cycles	J-STD-020	PASS
Variable Frequency Vibration	Peak acceleration 20G, frequency = 20Hz to 2KHz, total 48min duration	AEC Q103-003	PASS
Mechanical Shock	Peak acceleration 10KG, 0.2ms pulse duration, 3 pulses/direction, 6 directions	JESD22-B104	PASS
Package Drop	10 drops on each of 6 faces (total 60 drops) from a high of 1.2m to concrete surface	AEC Q100 Rev.H	PASS
ESD	HBM : All pins, Test Voltage=±3KV	JESD22-A114	PASS
	MM : All pins, Test Voltage=±300V	JESD22-A115	PASS
	CDM : All pins, Test Voltage=±500V	JEDEC JS-002	PASS
	Air Discharge : Test Voltage=±15KV	IEC 61000-4-2	PASS
	Contact Discharge : Test Voltage=±8KV	IEC 61000-4-2	PASS
Latch-up	Class II, TA=105℃, I=±150mA	AEC Q100 Rev.H	PASS

Notes: Microphones meet all acoustic and electrical specifications before and after reliability testing, except sensitivity which can deviate up to 3dB from its initial value.

After 5 reflow cycles, the sensitivity of the microphone shall not deviate more than 1 dB from its initial value.

Reflow Profile

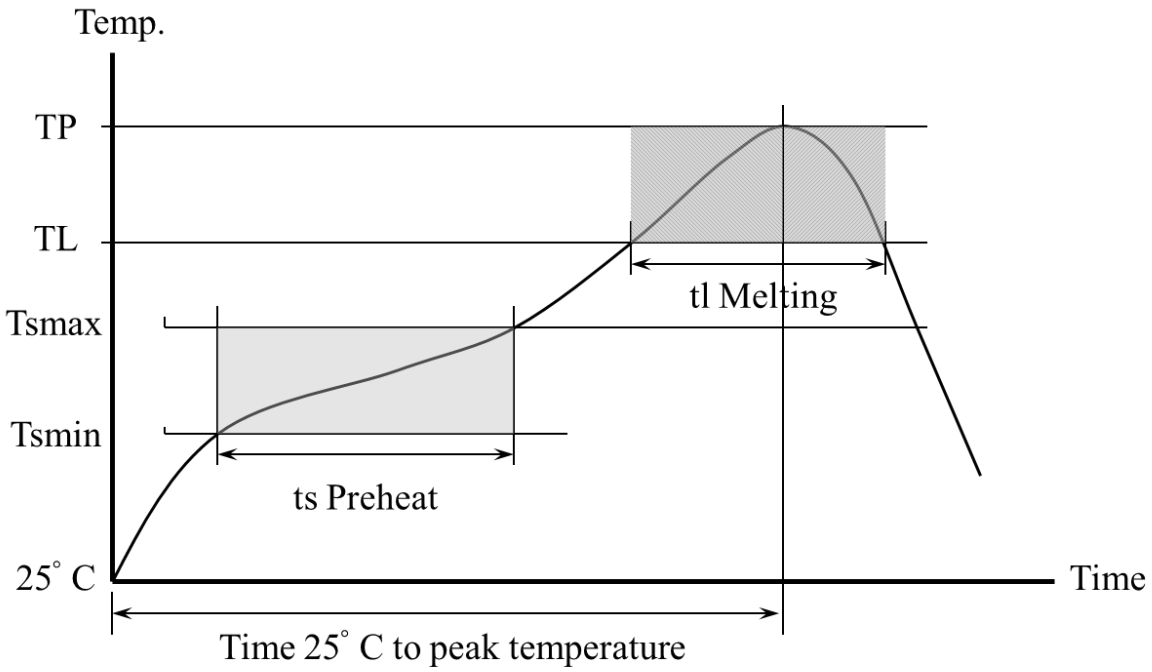

Table 5. Recommended Reflow Profile Limits

Profile Feature	Pb-free
Preheat	
Minimum temperature (Tsmin)	150 °C
Maximum temperature (Tsmax)	200 °C
Time (ts)	60~180 sec
Average Ramp up rate (Tsmax to Tp)	3 °C/sec
Melting area	
Melting temperature (TL)	217 °C
Time maintained above melting (tl)	60~150 sec
Peak Temperature (TP)	260 °C
Time within 5°C of actual peak temperature	20~40 sec
Ramp down rate	6 °C/sec maximum
Time 25°C to peak temperature	8 minute maximum

Notes: Based on IPC/JDEC J-STD-020 Revision F.

All temperatures refer to topside of the package, measured on the package body surface.

PCB Land Pattern Layout

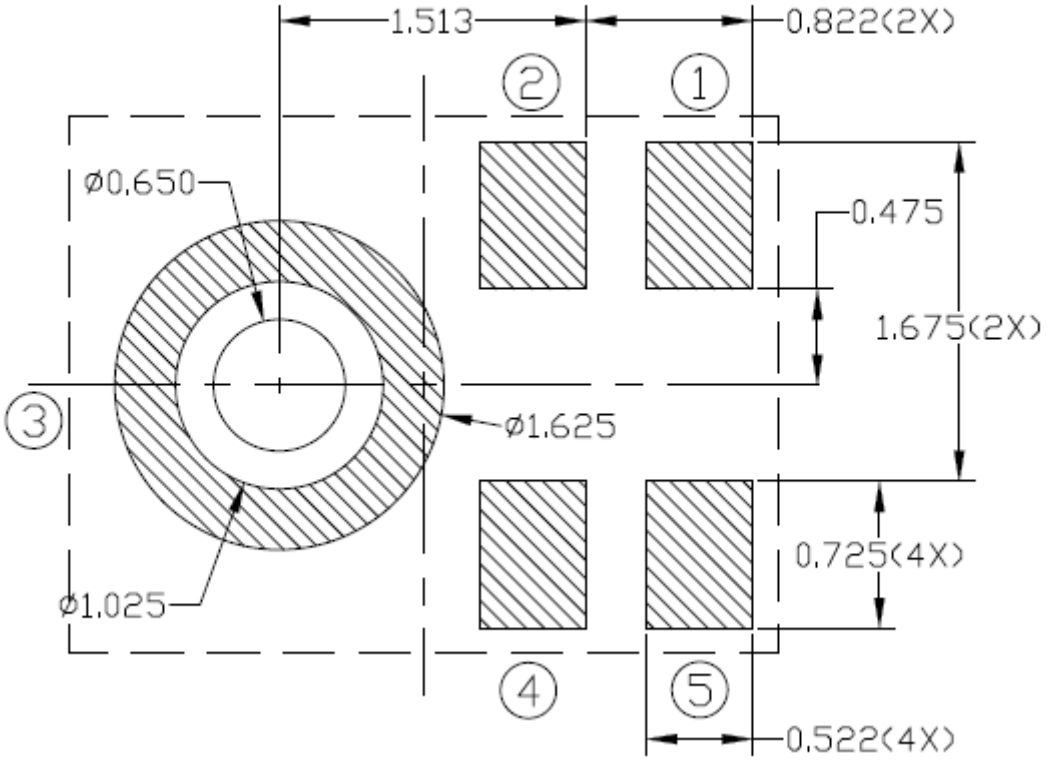

Application Circuit

Typical Application:

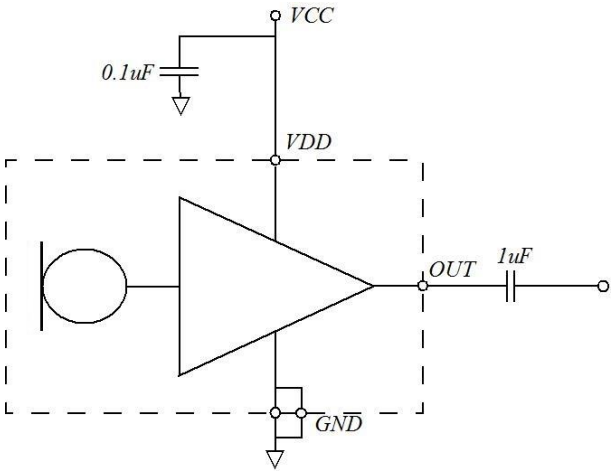

Handling Instructions

The MEMS microphone IC can be handled using standard pick-and-place and chip-shooting equipment. Care should be taken to avoid damage to the MEMS microphone IC structure as follows:

- Do not apply vacuum nozzle over the acoustic port (AP) of the microphone to avoid damage to the device.
- Do not blow air directly into acoustic port. If air gun cleaning is required, the minimum distance is 10cm and the maximum air blow pressure is 30psi.
- Brushing the board with/without solvents may damage the device.
- Do not use excessive force to place the microphone on the PCB.
- In case of manual handling, it should be handled with plastic tweezers to avoid damage to the device.
- Do not open and remove IC from packaging until devices are ready to be mounted.
- Suggest PCB depaneling be done with depaneling cutter/router, or manually de-panel PCB with care and without any contact of MEMS Microphone IC.

Dimensions

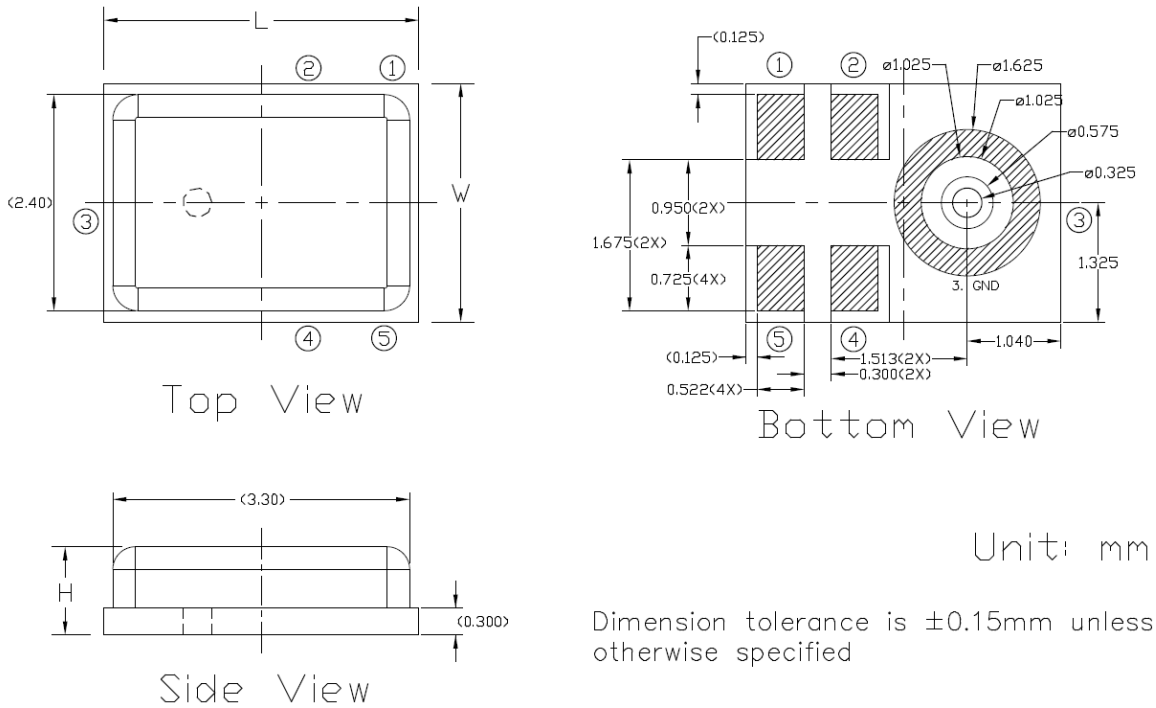

Table 6(Top View)

Item	Dimension	Tolerance
Length (L)	3.50 mm	±0.10 mm
Width (W)	2.65 mm	±0.10 mm
Height (H)	0.98 mm	±0.10 mm
Acoustic Port	Φ 0.325 mm	±0.05 mm

Package Information

Carrier Tape:

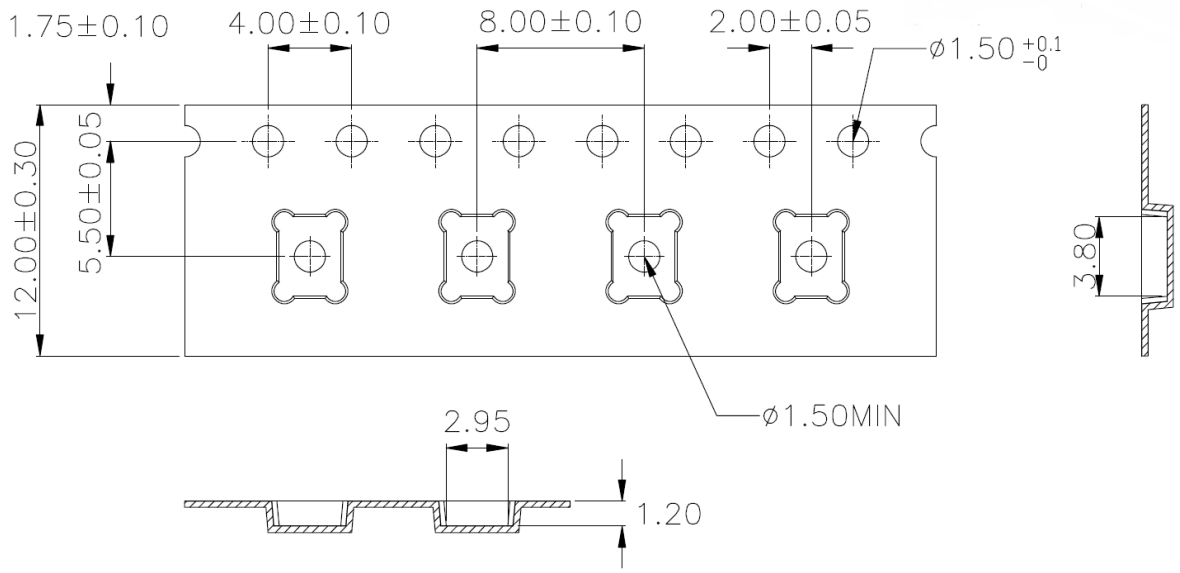

1. 10 sprocket hole pitch cumulative tolerance ±0.20.
2. Carrier camber is within 1 mm in 250 mm.
3. Material : Black Conductive Polystyrene Alloy.
4. All dimensions meet EIA-481 requirements.
5. Thickness : 0.30±0.05 mm.
6. MSL(Moisture sensitivity level) Class1.

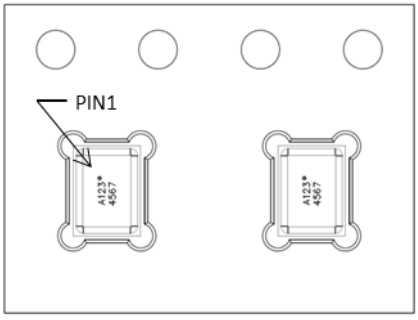

Laser Marking:

XXXX

AAAA

Laser marking on the top side

XXXX	**Internal Tracking Code**
AAAA	**Lot Tracking Code**

13” Tape Reel :

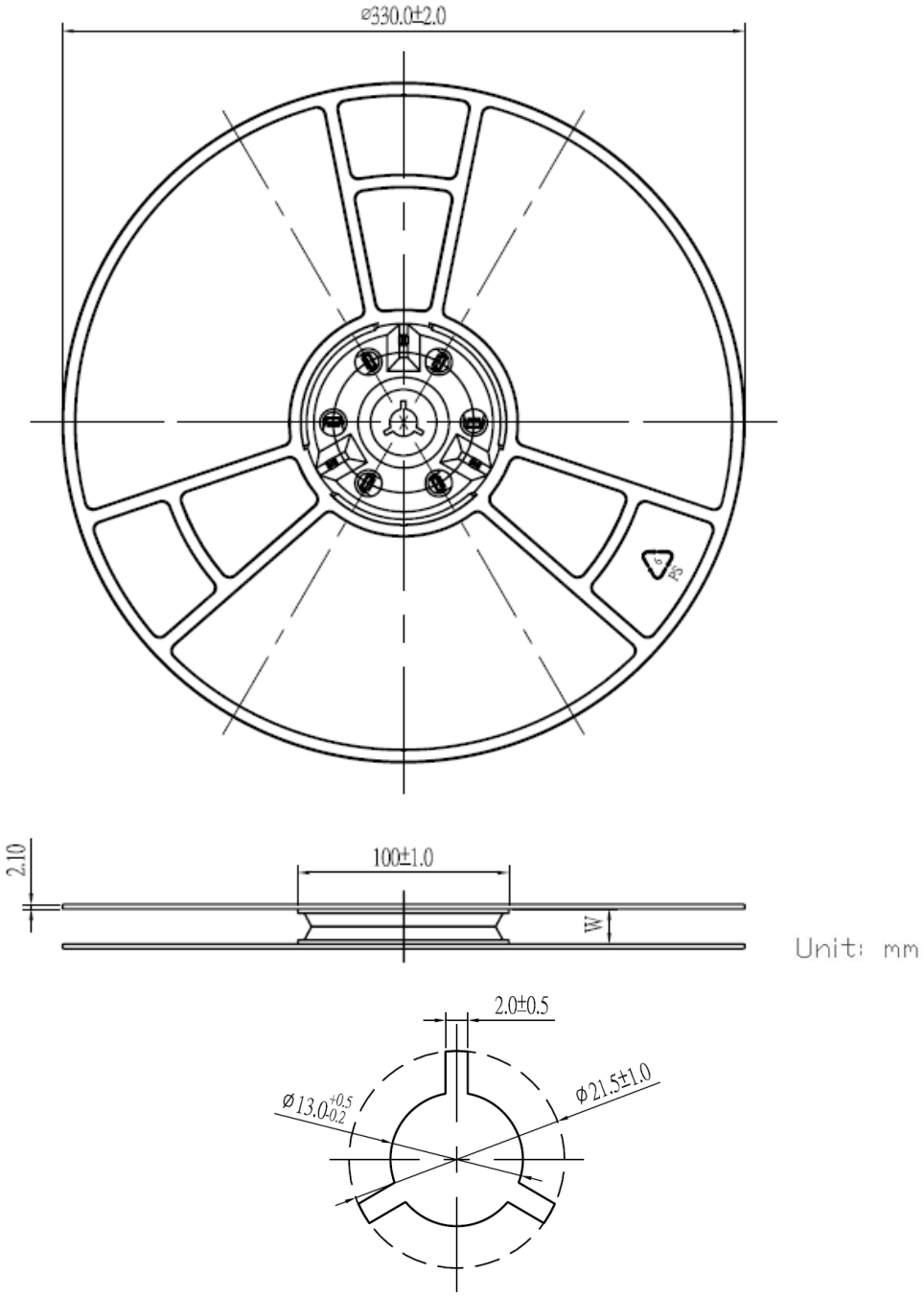

Model Number	Reel Diameter	Quantity Per Reel
3SM127LZB1HA	13”	5,000

Revision History

Revision	Date	Description
1.0	2021/09/01	Formal release
1.1	2021/09/16	Modify “Reliability Qualifications”
1.2	2022/09/12	Modify “Reliability Qualifications”
1.3	2023/01/03	Modify “Frequency Response”
1.4	2023/04/20	Modify “Package Information”
1.5	2024/03/14	Modify “PCB Land Pattern Layout”