3SM122KZB1VD MEMS Microphone IC

Product Description

The ***3SM122KZB1VD*** microphone IC are integrated with specialized pre-amplification ASIC to provide high sensitivity, high SNR output from a capacitive audio sensor. It's packaged for surface mounting and high temperature reflow assembly. ***3SM122KZB1VD*** which is able to endure reflow temperature up to 260℃ for 30 seconds can be used in SMT process. It is widely used in telecommunication and electronics device such as headset, wearable device.

Features

- Bottom port
- High stability - no risk of membrane aging
- Suitable for automatic pick-and-place handler and SMT process
- Miniature dimension 2.75mm x 1.85mm x 0.90mm
- Low current consumption 80uA
- RoHS/Green compliant
- Sensitivity deviation within ±1dB
- Package type : LGA 4-pin
- Omnidirectional

Applications

- ANC Headsets
- TWS Headsets
- Wearable Devices
- IoT Devices

Table of Contents

Product Description ……. P.1
Features …….. P.1
Applications …… P.1
Table of Contents……..……. P.2
Functional Block Diagram …….……. P.3
Pin Definition and Function ……..... P.3
Temperature Range …..……... P.3
Acoustical and Electrical Characteristics..... P.4
Frequency Response …. …….…… P.5
Reliability Qualifications ……..... P.6
Reflow Profile ……..... P.7
PCB Land Pattern Layout ……... P.8
Application Circuit …….. P.9
Handling Instructions ……..... P.10
Dimensions …… P.11
Package Information ……... P.12
Revision History ……. P.14

Functional Block Diagram

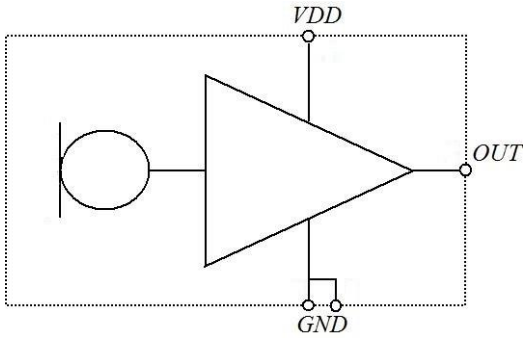

Pin Definition and Function

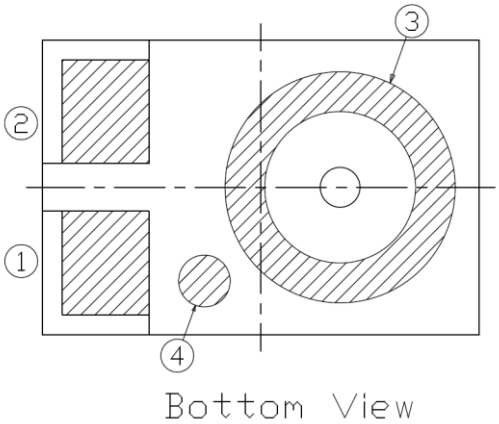

Table 1

Pin #	Symbol	Function
1	VDD	Power supply
2	OUTPUT	Analog signal output
3	GND	Ground
4	No Connect	N/A

Temperature Range

Table 2

Storage Temperature	T_{STG}	-40℃ ~ 125℃
Operating Temperature Range	T_A	-40℃ ~ 105℃

Acoustical and Electrical Characteristics

Table 3 Typical test conditions are TA = 23 °C, VDD = 2.1 V and R.H. = 50 % measured in a pressure chamber test setup. All voltages refer to GND node

Parameters	Symbol	Min.	Typ.	Max.	Unit	Test Conditions
Acoustic						
Sensitivity	S	-39	-38	-37	dBV/Pa	1KHz, 94dBSPL
Signal to Noise Ratio	S/N		64		dBA	A-weighted
Equivalent Noise Level	ENL		30		dBA	A-weighted
Total Harmonic Distortion	THD		0.1		%	94dBSPL
			1		%	120dBSPL
Acoustic Overload Point	AOP		128		dBSPL	10% THD @1KHz, S = Typ.
Low Frequency Roll-off	LFRO		20		Hz	-3dB relative to 1KHz
Electrical						
Supply Voltage	Vdd	1.6		3.6	V	
Current Consumption	Isb		80		μA	Vdd=2.1V
			80		μA	Vdd=3.6V
Power Supply Rejection	PSR+N		-93		dBV(A)	217Hz, 100 mV peak to peak square wave on Vcc 2.1V
Power Supply Rejection Ratio	PSRR		63		dB	1KHz, 200 mV peak to peak sine wave on Vcc 2.1V
Output Impedance	Zout			200	Ω	@1KHz
Output DC Offset			1.3		V	
Directivity	Omnidirectional					
Polarity	Decreasing output voltage					Increasing sound pressure

Frequency Response

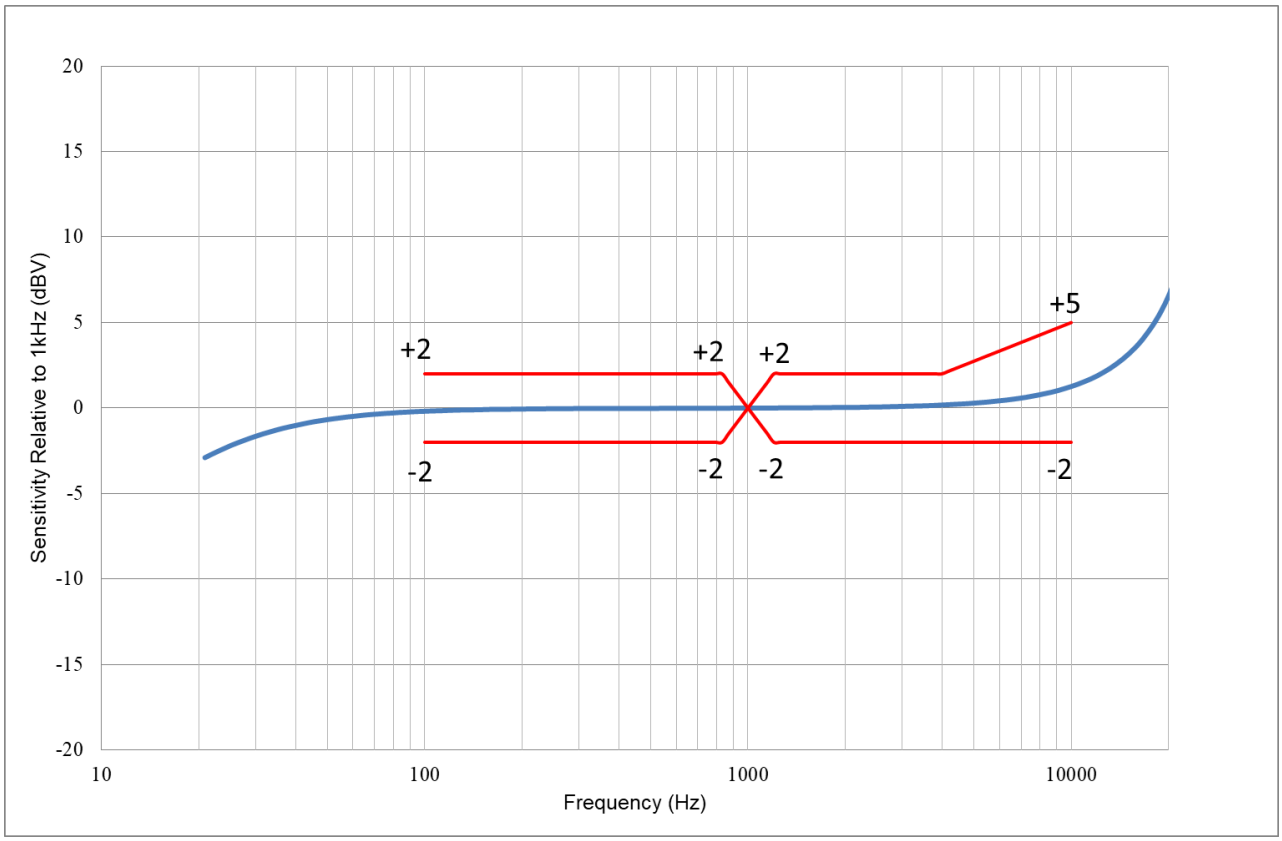

Typical frequency response normalized to 1KHz (Measured)

Upper Limit						
Hz	100	800	1000	1200	4000	10000
dB ref. 1KHz	+2	+2	0	+2	+2	+5
Lower Limit						
Hz	100	800	1000	1200	4000	10000
dB ref. 1KHz	-2	-2	0	-2	-2	-2

Reliability Qualifications

Table 4

Test Item	Description
High Temperature Storage	Storage at 125℃ for 1,000 hours JESD22-A103
Low Temperature Storage	Storage at -40℃ for 1,000 hours JESD22-A119
High Temperature Operation Bias	Under Bias at 105℃ for 1,000 hours JESD22-A108
Low Temperature Operation Bias	Under Bias at -40℃ for 1,000 hours JESD22-A108
Temperature Humidity Bias	Under Bias at 85℃/85%RH for 1,000 hours JESD22-A101
Thermal Cycling Test	Thermal Cycle from -40℃~125℃, 100 cycles JESD22-A104
Reflow	5 reflow cycles with peak 260℃ J-STD-020
Vibration	4 cycles lasting 12 minutes from 20 to 2KHz in X, Y and Z with peak acceleration of 20G JESD22-B103
Mechanical Shock	Total 18 pulses 10,000G in X,Y and Z JESD22-B104
ESD	HBM:3KV, MM:300V, CDM:500V Air Discharge:15KV, Contact Discharg:8KV JESD22-A114(HBM) JESD22-A115(MM) JESD22-C101(CDM) IEC 61000-4-2(Air Discharge) IEC 61000-4-2(Contact Discharge)

Notes: Microphones meet all acoustic and electrical specifications before and after reliability testing, except sensitivity which can deviate up to 3dB from its initial value.

After 5 reflow cycles, the sensitivity of the microphone shall not deviate more than 1 dB from its initial value.

Reflow Profile

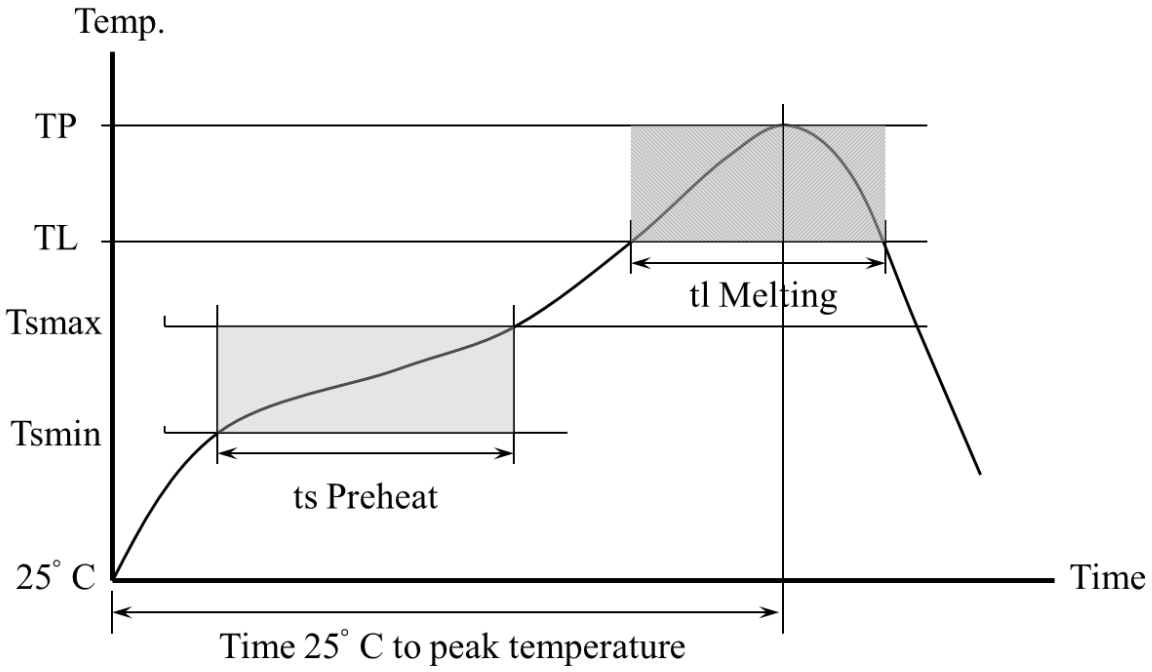

Table 5. Recommended Reflow Profile Limits

Profile Feature	Pb-free
Preheat	
Minimum temperature (Tsmin)	150 °C
Maximum temperature (Tsmax)	200 °C
Time (ts)	60~180 sec
Average Ramp up rate (Tsmax to Tp)	3 °C/sec
Melting area	
Melting temperature (TL)	217 °C
Time maintained above melting (tl)	60~150 sec
Peak Temperature (TP)	260 °C
Time within 5°C of actual peak temperature	20~40 sec
Ramp down rate	6 °C/sec maximum
Time 25°C to peak temperature	8 minute maximum

Notes: Based on IPC/JDEC J-STD-020 Revision F.

All temperatures refer to topside of the package, measured on the package body surface.

PCB Land Pattern Layout

Recommended Land Pattern

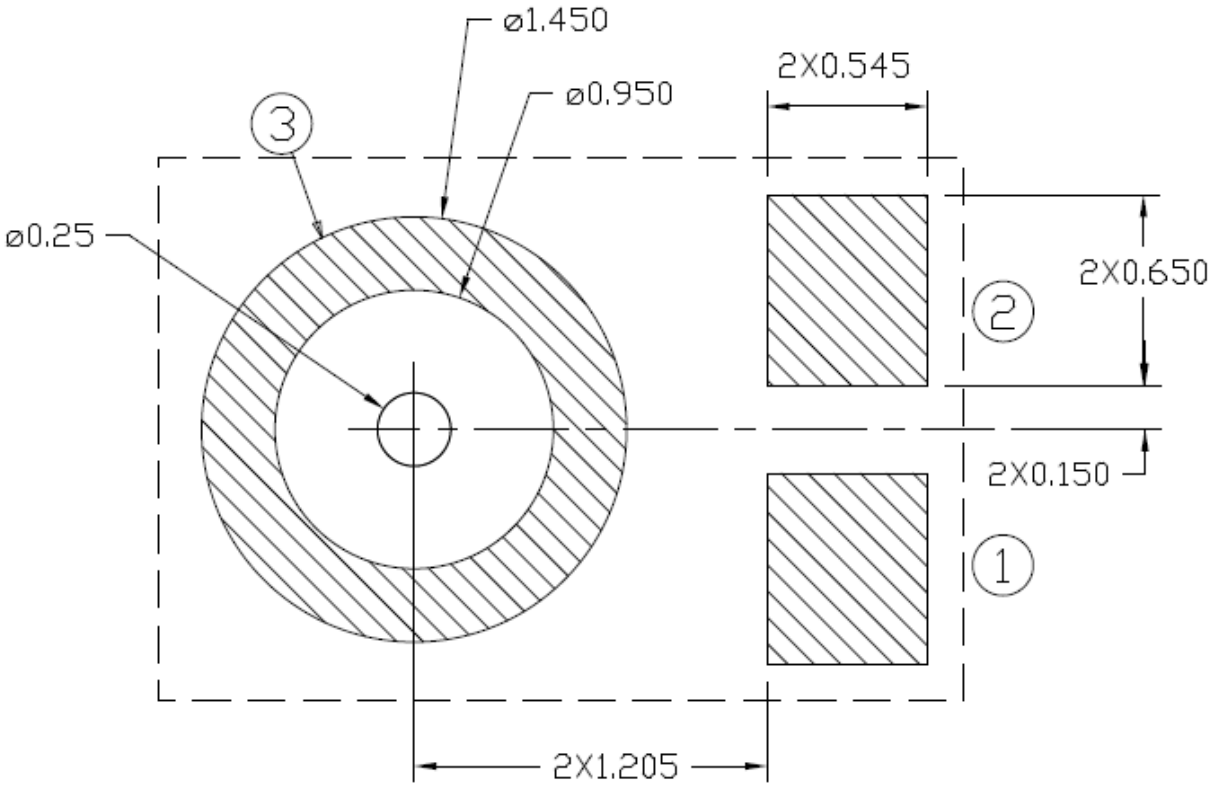

Application Circuit

Typical Application:

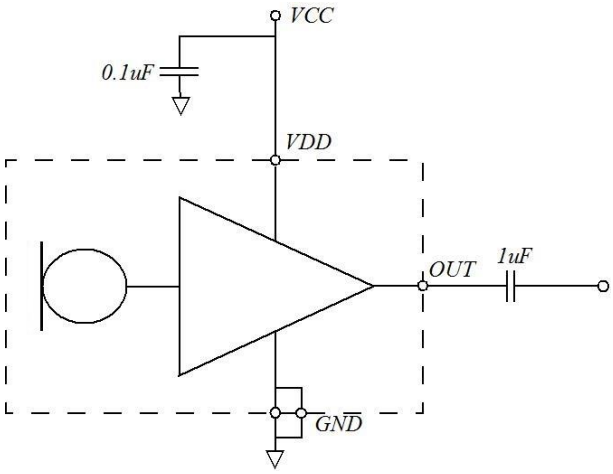

Handling Instructions

The MEMS microphone IC can be handled using standard pick-and-place and chip-shooting equipment. Care should be taken to avoid damage to the MEMS microphone IC structure as follows:

- Do not apply vacuum nozzle over the acoustic port (AP) of the microphone to avoid damage to the device.
- Do not blow air directly into acoustic port. If air gun cleaning is required, the minimum distance is 10cm and the maximum air blow pressure is 30psi.
- Brushing the board with/without solvents may damage the device.
- Do not use excessive force to place the microphone on the PCB.
- In case of manual handling, it should be handled with plastic tweezers to avoid damage to the device.
- Do not open and remove IC from packaging until devices are ready to be mounted.
- Suggest PCB depaneling be done with depaneling cutter/router, or manually de-panel PCB with care and without any contact of MEMS Microphone IC.

Dimensions

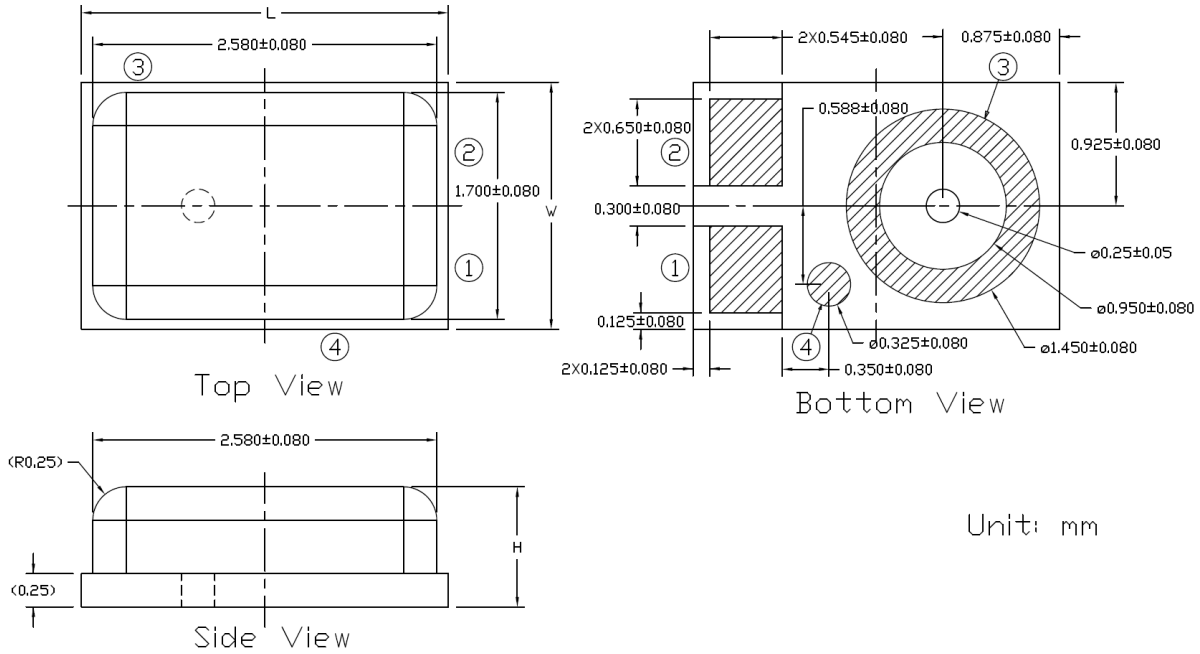

Table 6(Top View)

Item	Dimension	Tolerance
Length (L)	2.75 mm	±0.10 mm
Width (W)	1.85 mm	±0.10 mm
Height (H)	0.90 mm	±0.10 mm
Acoustic Port	Φ 0.25 mm	±0.05 mm

Package Information

Carrier Tape:

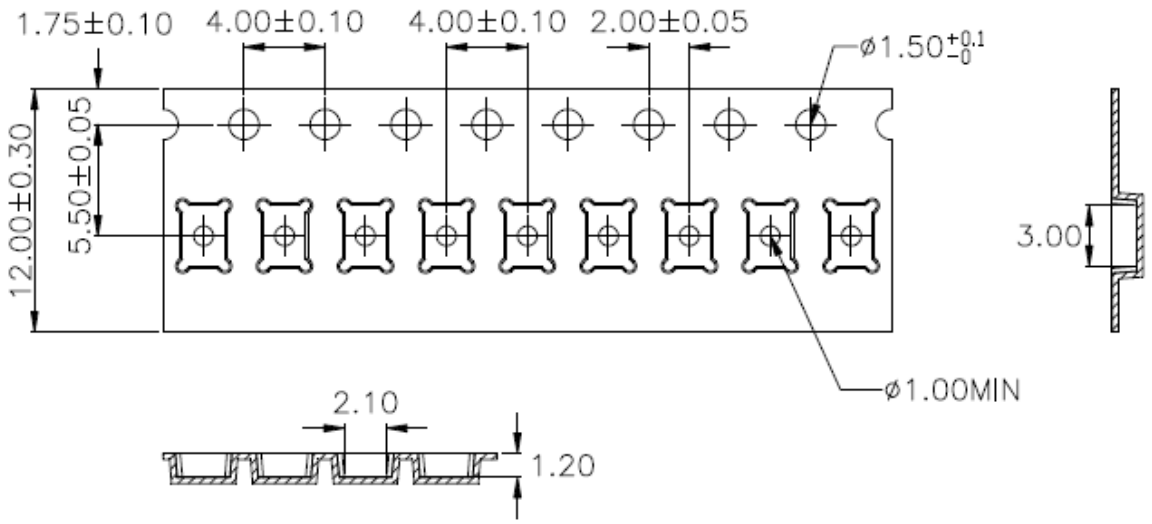

1. 10 sprocket hole pitch cumulative tolerance ±0.20.
2. Carrier camber is within 1 mm in 250 mm.
3. Material : Black Conductive Polystyrene Alloy.
4. All dimensions meet EIA-481 requirements.
5. Thickness : 0.30±0.05 mm.
6. MSL(Moisture sensitivity level) Class1.

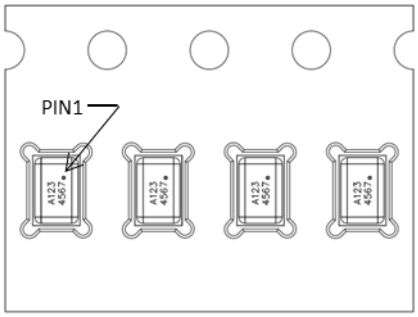

Laser Marking:

XXXX

AAAA

Laser marking on the top side

XXXX	**Internal Tracking Code**
AAAA	**Lot Tracking Code**

13” Tape Reel :

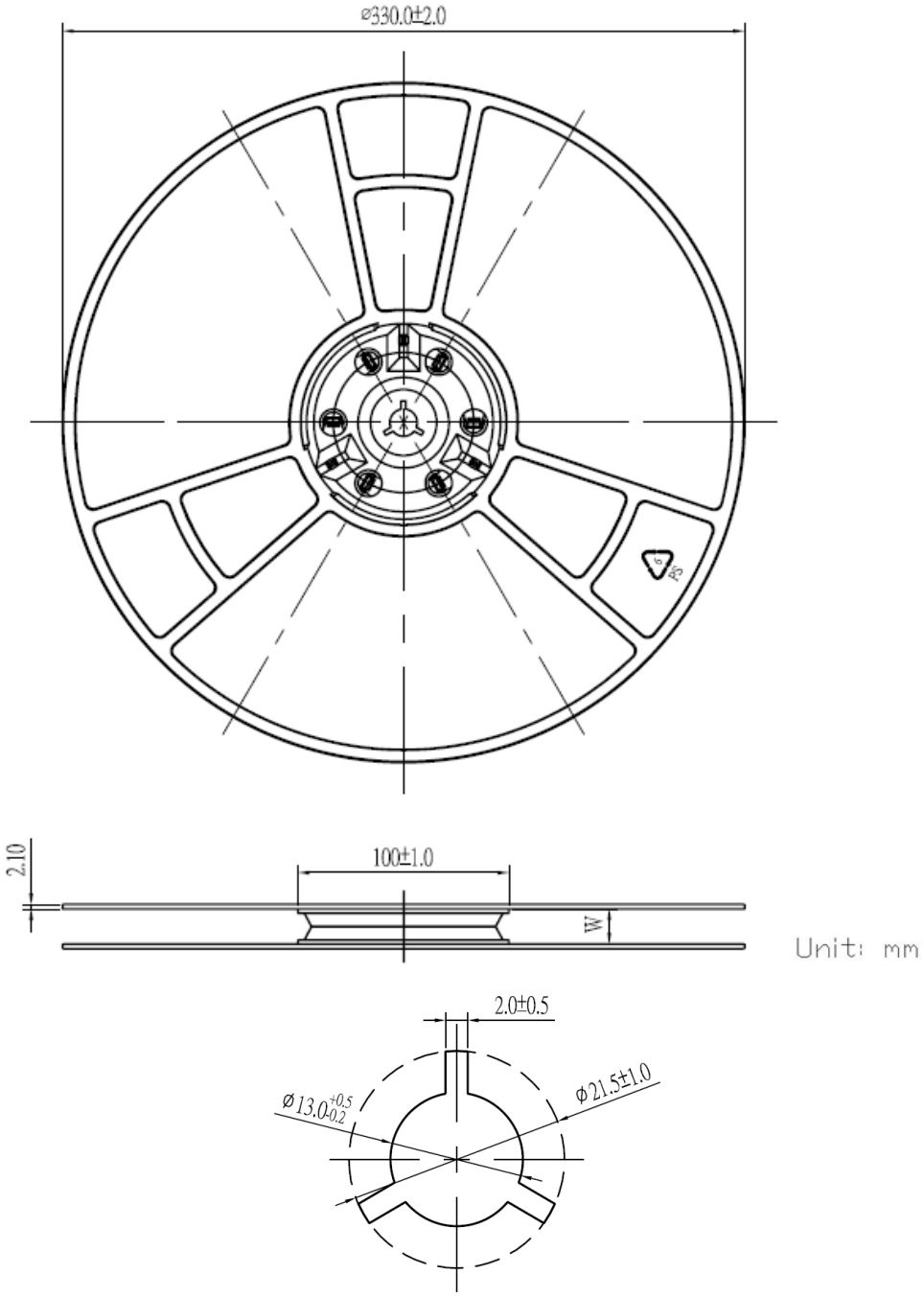

Model Number	Reel Diameter	Quantity Per Reel
3SM122KZB1VD	13”	5,000

Revision History

Revision	Date	Description
1.0	2019/12/27	Formal release
1.1	2020/01/20	Modify “Features”
1.2	2020/07/08	Modify “Features” Modify “Acoustical and Electrical Characteristics” Modify “Frequency Response” Modify “Reliability Qualifications” Modify “Reflow Profile” Modify “Package Information”
1.3	2020/09/29	Modify “Product Description”
1.4	2020/12/21	Add “Laser Marking”
1.5	2021/07/05	Modify “Acoustical and Electrical Characteristics” Modify “Frequency Response” Modify “Reliability Qualifications” Modify ” Package Information”
1.6	2023/04/19	Modify “Reliability Qualifications” Modify “Package Information”